Research Article Tiwari *et al.*, 8(Spec. Issue), 2017:149-153]
ISSN: 0976-7126

Int. J. of P. & Life Sci. (Special Issue Engg. Tech.)

Bit Error Control and Execution Investigation of MIMO-OFDM Techniques

Manish Kumar Tiwari*, Priyanka Jaiswaland Manish Jain*****
*MTech Scholar, Department of Electronics & Communication Engineering
** Asst.Prof. , Department of Electronics & Communication Engineering
RKDFIST, RGPV University, Bhopal
***HOD, Department of Electronics & Communication Engineering
RKDFIST, RGPV University, Bhopal
manishomkara@gmail.com*, priyankajaiswal.jkl@gmail.com**, manish_jain@gmail.com ***

Abstract

The main objective of the MIMO-OFDM system is to add OMDM technology with the techniques of OMDO technology. Increasing demand for multimedia services and the development of Internet-related content increases interest in high-speed communication. OFDM is a type of multichannel modulation that divides the same channel into several parallel sub-channels or suborders so that many symbols can be sent in parallel. OFDM system spreads the information over number of transporters which are at particular predefined frequencies. This diminishes or eliminates the ISI. Forward blunder amendment or channel coding is a strategy utilized for controlling mistakes in information transmission over inconsistent or boisterous correspondence channels. The goal of our proposed paper is to execute the FEC into the MIMO OFDM frameworks and its execution is dissected by utilizing MATLAB over various blurring channels. For adjustment it utilizes M-QAM which consolidates both ASK and PSK along these lines empowering a few bits to be transmitted per image.

Keyword: Inter symbol interference (ISI), Bit error rate (BER), QAM , MIMO-OFDM

Introduction

Multiplexing method with Orthogonal Frequency Division Multiple Input Multiple Output (MIMO) system has been an area of interesting and challenging research in broadband wireless communications. Multiple Input Multiple Output (MIMO) systems and antennas are recognized as critical success using many transmitting antenna, which allows future wireless systems to obtain more data with limited bandwidth and power resources. Channel has been using multiple antennas to increase diversity to combat Lptit system.

a) Orthogonal Frequency Division Multiplexing

Orthogonal recurrence division multiplexing (OFDM) is a multi-transporter transmission procedure that has been as of late perceived as a fantastic technique for rapid bi-directional remote information correspondence. Its history goes back to the 1960s, however it has as of late turned out to be famous on the grounds that practical coordinated circuits that can play out the fast advanced operations fundamental have turned out to be accessible . OFDM impactively presses multiple tweaked transporters firmly together, lessening the required transmission capacity yet keeping the regulated signs orthogonal so they don't meddle with each other. Today, the innovation is utilized as a part of such frameworks hilter kilter computerized supporter line (ADSL) and in addition remote frameworks. OFDM is like FDM however considerably more frightfully effective by dividing the sub-channels substantially nearer together. This is finished by discovering frequencies that are orthogonal, which implies that they are opposite in a numerical sense, permitting the range of each sub-channel to cover another without meddling with it. Keeping in mind the end goal to demodulate the flag, a discrete Fourier change (DFT) is required. Quick Fourier change (FFT) chips are

ISSN: 0976-7126

monetarily accessible, making this a moderately simple operation. The square outline of the OFDM framework is appeared in the fig.1.

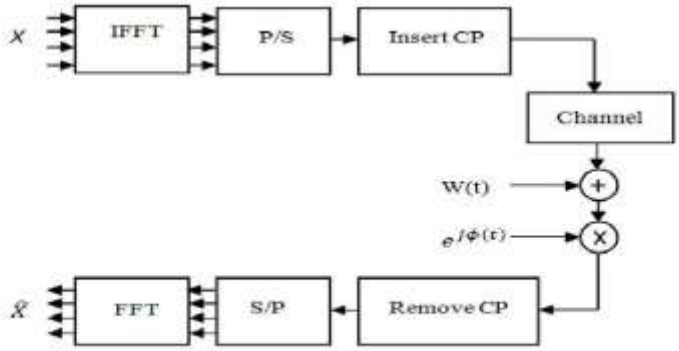

Figure.1: OFDM TRANSCEIVER

One of the primary favorable circumstances of OFDM strategies lives in their capacity to battle multipath blurring without the requirement for comp lex leveling systems. Another favorable position is the high ghostly productivity accomplished by mapping the balanced information onto a few orthogona l bearers, with the conjunction of high - arrange regulations like M-QAM. OFDM is considered for some activities, for example, Digital Audio Broadcasting (DAB), Dig ital Video Terrestrial-Broadcasting (DVB-T), Dig ital Radio mandib le (DRM), Asynchronous Digital Subscriber Line (ADSL) et cetera.

b) Different Input Multiple Output (Mimo)

MIMO is impactively a radio reception apparatus innovation as it utilizes multiple receiving wires at the transmitter and collector to empower an assortment of flag ways to convey the information, picking separate paths for every reception apparatus to empower multiple flag ways to be utilized. . The guideline of decent variety is to give the beneficiary multiple adaptations of a similar flag. On the off chance that these can be made to be influenced in different courses by the flag way, the likelihood t cap they will all be influenced in the meantime is impressively decreased. As needs be, decent variety settles a connection and enhances execution, decreasing mistake rate. To pick up the maximum limit of MIMO remote channel one of the proficient procedures is to use space time coding. In STC, the multiple copies of in development are transmitted for achieving decent variety is extracted fro m a space time encoder which encodes a solitary piece through space and time. So coding is done in both spatial and transient hub to correspond the transmitted flag fro m different transmit receiving wire at an alternate time. An especially exquisite plan for MIM O coding was created by Altamonte. The related codes are regularly called MIMO Altamonte codes or just Altamonte codes.

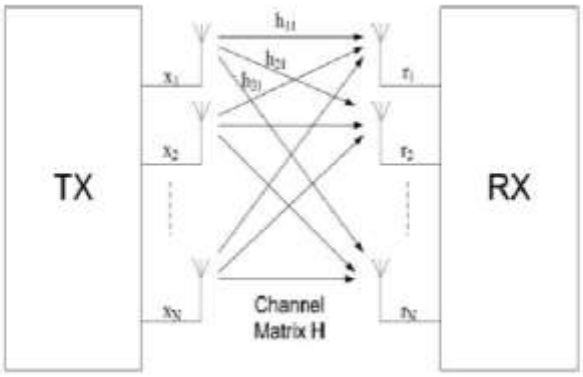

Figure 2: MIMO TRANSCEIVER

c) Forward Error Correction

ISSN: 0976-7126

Forward blunder amendment (FEC) is a technique for getting mistake control in information transmission in which the source (transmitter) sends excess information and the goal (collector) perceives just the segment of the information that contains no obvious blunders. The two principle classifications of FEC codes are BLOCK CODES and CONVOLUTIONAL CODES. Piece codes deal with settled size squares (parcels) of b its or images of foreordained size. Convolution codes take a shot at bit or image surges of arbitrary length. connected codes frame a class of ERROR-CORRECT ING CODES that are determined by brush inning an internal code and an external code. The linked code is appeared in fig.3.

The Reed-Solomon encoding is for the most part used to recoup the fundamental flag in the event that it is mutilated. The properties of Reed-Solomon codes make them appropriate to applications, where blunders happen in blasts. Reed - Solomon mistake adjustment is a coding plan which works by first building a polynomial from the information images to be transmitted, and afterward sending an over inspected rendition of the polynomial rather than the first images themselves.

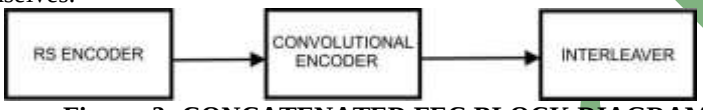

Figure .3: CONCATENATED FEC BLOCK DIAGRAM

A Reed-Solomon code is determined as RS (n, k, t) with l-b it images. This implies the encoder takes k information images of l bits each and adds 2t equality images to develop a n-image codeword. The reason for a convolution encoder is to take a solitary or mu lti-b it input and produce a tangle rix of encoded yields. One motivation behind why this is essential is that in computerized balance co immunizations frameworks, (for example, remote communicate particle frameworks, and so on.) clamor and other outside elements can change bit groupings.

By including extra bits we make b it error checking more effective and take into account more exact exchanges. By transmitting a greater number of bits than the first flag we introduce a specific repetition that can be utilized to decide the first flag within the sight of a blunder.

After the RS encoding process, the information bits are additionally encoded by a twofold convolution encoder. It changes over the single or mu lti b it into grid frame. It is utilized to dispose of clamor from the primary flag. It is another procedure of mistake adjustment.

d) MIMO - OFDM

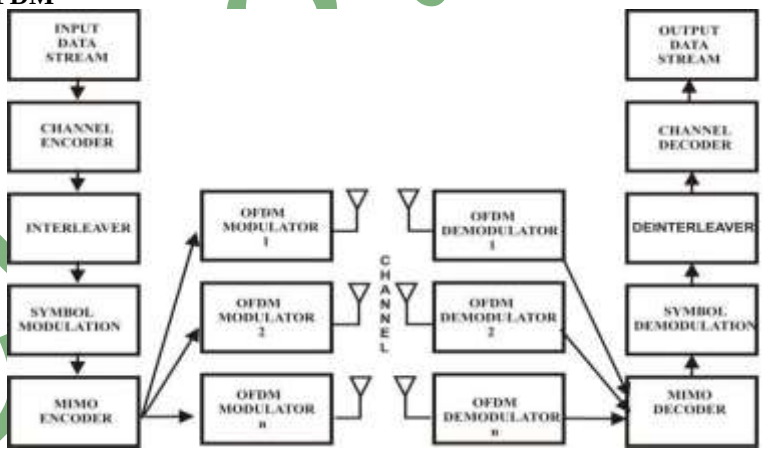

Figure 4:MIMO-OFDM transmission

The square diagram smash of the MIMO-OFDM framework is appeared in the fig.4.In th is paper, we have proposed a MIMO-OFDM based framework employing the Forward Error Correction code which is the connected code. The paper is sorted out as takes after. In the area II, we portrayed the simulink display and in segment III, simulation comes about are appeared. The simulation of the proposed framework by utilizing the apparatus MATLAB simulink. The execution of the framework is dissected over the rician and Rayleigh blurring channel alongside the AWGN channel.

In spatial assorted variety various radio wires are utilized to get the transmitted signs coming fro m diverse mu ltipath blurs . Say. You have M= 3 number of radio wires in the transmitting side and have K (a1, a2, a3, a4, a5, a6) = 6 bits for sending. At first partition the bits into M=3 sub surges of information {(a1, a3), (a2, a4), (a3, a6)} and afterward multiply each sub stream of information with three bearer recurrence so as to transmit them by means of

three separate receiving wires. In the event that all the sub-streams must be transmitted by one bearer then the data transfer capacity utilizations would be three time more noteworthy this is one of the colossal preferred standpoint of spatial multiplexing .

Presently at the less than desirable end each sub - stream will have three spatial marks - that implies add up to 9 spatial mark will be at the getting reception apparatus due to the multipath condition each sub stream will have its own particular spatial mark. In light of this spatial mark sub-surges of information will be demultiplexed and decoded keeping in mind the end goal to get back the first information stream.

1. SYSTEM MODEL

The framework demonstrate comprises of three areas Viz Trans mitter, Channel, Receiver. The proposed MIMO-OFDM framework utilizing the linked codes is displayed in MATLAB utilizing the SIMULINK. The simulink model of the proposed framework is appeared in the Fig.5.The parameters for the recreated framework is appeared in the

a) Transmitter

The proposed framework utilizes the direct coding strategy depicted in the segment I.C. The encoding comprises of the external Reed Solomon Code and inward Convolution code. The puncturing process is performed on the encoder yield. The parameters of the encoder depend on the parameter .

b) Channel

The 2X1 M IMO channel is developed by utilizing the blurring chann els alongside the AWGN channel. The AWGN channel is utilized to mimic the foundation clamor to the transmitted information. The blurring channels utilized are Rician and Ray leigh prevailing fashioning channels. The divert display is appeared .

c) Beneficiary

The channel decoder plays out the converse operation of the channel encoding segment. The parameter depends on the one that was utilized as a part of the encoding procedure. With the end goal of disentangling the convolution code, Viterb i decoder is utilized. The mistake rate is ascertained by contrasting the recuperated information and that of the transmitted information.

2. Proposed Work

As shown in Figure 1, the input serial binary data will be processed by a data scrambler ¯stand then channel coding is applied to the input data to improve the BER (bit error rate) performance of the system. The encoded data stream is further interleaved to reduce the burst symbol error rate. Dependent on the channel condition like fading, dieren base modulation modes such as BPSK (binary phase shift keying), QPSK (quadrature phase shift keying) and QAM are adaptively used to boost the data rate. The modulation mode can be changed even during the transmission of data frames. The resulting complex numbers are grouped into column vectors which have the same number of elements as the FFT size, *N*.

- MATLAB structure that contains the trellis description of the convolutional encoder.
- Viterbi Decoder
- Decode convolutionally encoded data using Viterbi algorithm
- Convolution sub-library of Error Detection and Correction

Conclusion

The plot of BER Vs SNR is plotted in MATLAB by utilizing the montecarlo simulation in BERTOOL. The BER is calculated by contrasting the info information and that of the recuperated information. The framework is simulated over various scopes of SNR and the relating BER was ascertained. Fro m the outcomes, plainly the BER of MIMO-OFDM framework with linked FEC is superior to anything the framework utilizing OFDM without having MIMO. Additionally, the execution of the framework is better in the Rican blurring channel.

References

[1] Electronic Communications Committee, "CEPT Report 25: Technical Roadmap proposing relevant technical options and scenarios to optimise the Digital Dividend," Tech. Rep., 2008.

[2] EXALTED FP7 258512, "D2.1: Description of baseline reference systems, scenarios, technical requirements & evaluation methodology," Tech. Rep., 2011.

[3] G. Fettweis, M. Krondorf, and S. Bittner, "GFDM - Generalized Frequency Division Multiplexing," in Proc. IEEE 69th Vehicular Technology Conf. VTC Spring 2009. [4] N. Michailow, M. Lentmaier, P. Rost, and G. Fettweis, "Integration of a GFDM Secondary System in an OFDM Primary System," in Future Network & Mobile Summit 2011.

[5] T. Ihalainen, A. Viholainen, and M. Renfors, "On spectrally efficient multiplexing in cognitive radio systems," in Proc. 3rd Int. Symp. Wireless Pervasive Computing ISWPC 2008.
[6] T. Ihalainen, A. Viholainen, T. H. Stitz, and M. Renfors, "Spectrum monitoring scheme for filter bank based cognitive radios," in Proc. Future Network & Mobile Summit 2010
[7] J. A. C. Bingham, "Multicarrier modulation for data transmission: An idea whose time has come," IEEE Commun. Mag., vol. 28, no. 5, pp. 5–14, May 1990.
[8] J. Ahn and H. S. Lee, "Frequency domain equalization of OFDM signals over frequency nonselective Rayleigh fading channels," Electron. Lett., vol. 29, no. 16, pp. 146–147, Aug. 1993.
[9] M. Russell and G. L. Stuber, "Interchannel interference analysis of ¨ OFDM in a mobile environment," in Proc. IEEE VTC'95, Chicago, IL, July 1995, pp. 820–824.
[10] G. Strang, Linear Algebra and Its Applications, 3rd ed. Philadelphia, PA: Saunders, 1988. [8] H. K. Lau and S. W. Cheung, "A pilot symbol-aided technique used for digital signals in multipath environments," in Proc. IEEE ICC'94, New Orleans, LA, May 1994, pp. 1126–1130.